Qatego # QA 4777

Mounting instructions

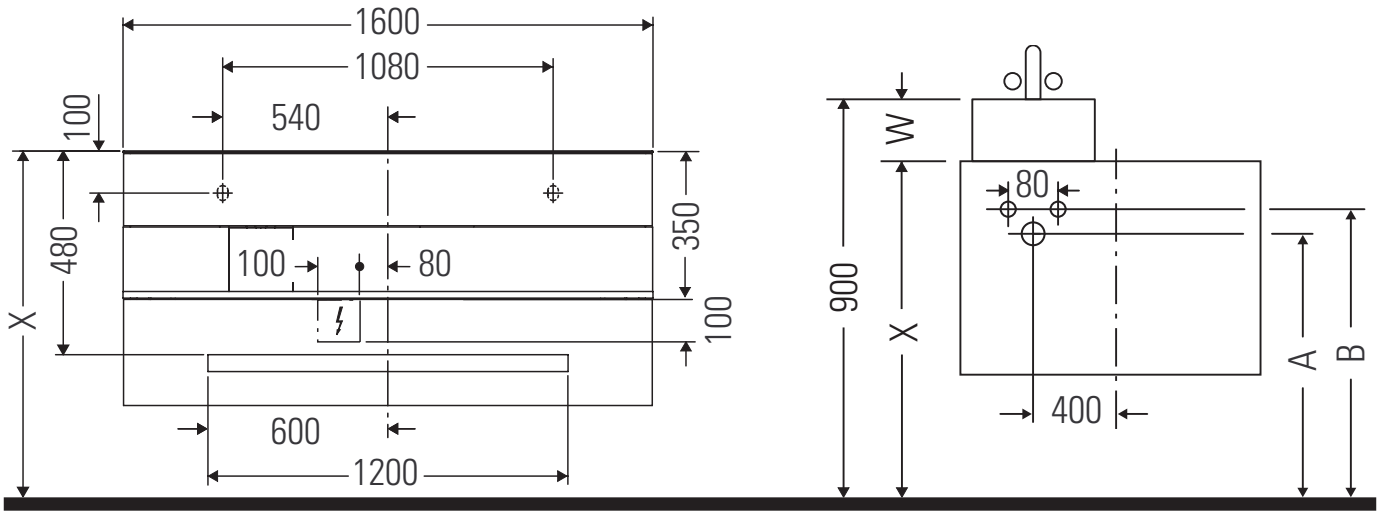

A	B
610	660

X + W = 900

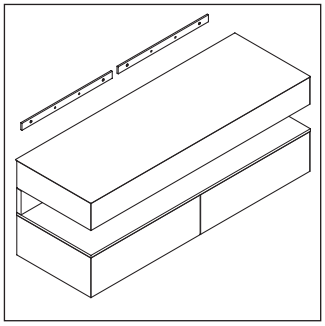

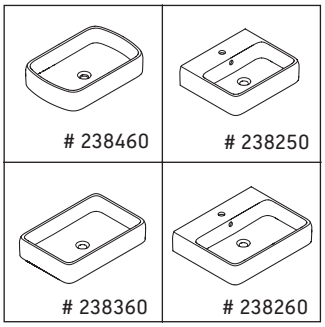

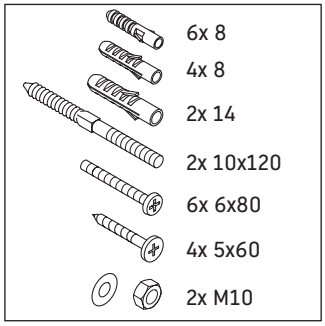

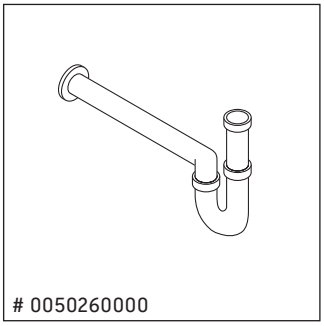

Instructions for use

The bathroom furniture range complies with the standards and guidelines applicable at the time of delivery and is designed for use in bathrooms. Direct contact with water should be avoided, for example, when showering.

We reserve the right to make technical improvements and design modifications to the products illustrated.

DURAVIT

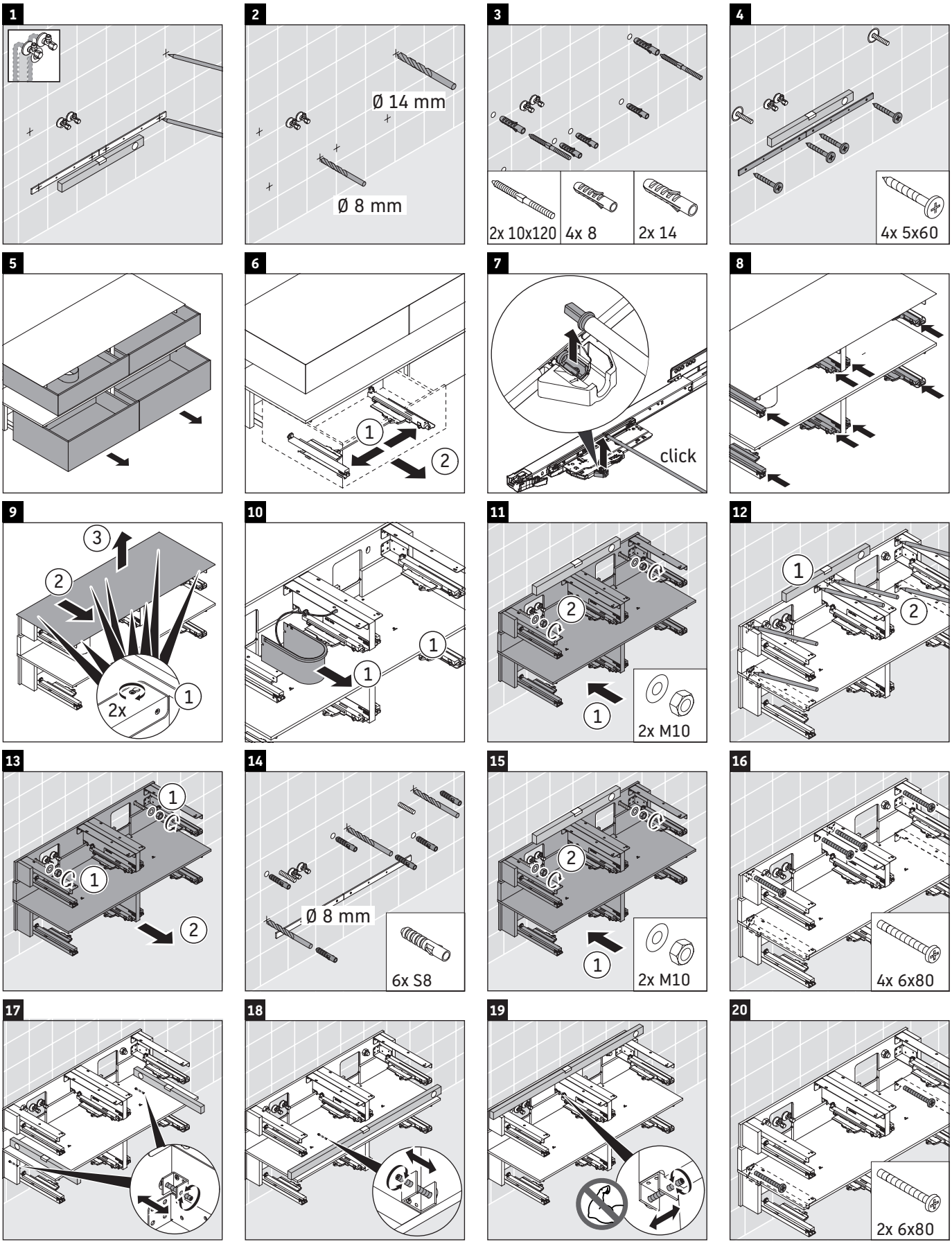

Order no. QA4777/23.01.1

Duravit AG, Werderstr. 36, 78132 Hornberg, Germany, Phone +49 78 33 700, Fax +49 78 33 70 289, info@duravit.de, www.duravit.de

21

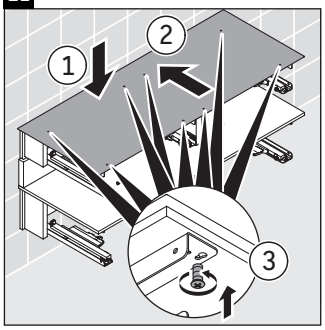

22 # 238460/238360

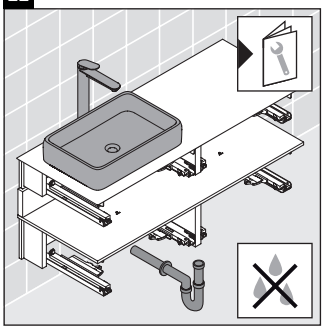

23 # 238460/238360

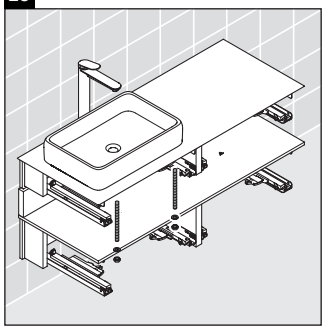

24 # 238250/238260

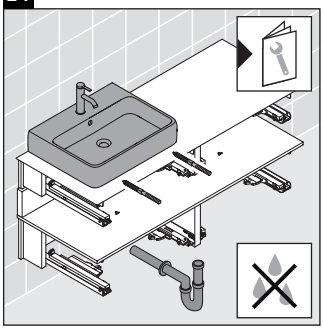

25 # 238250/238260

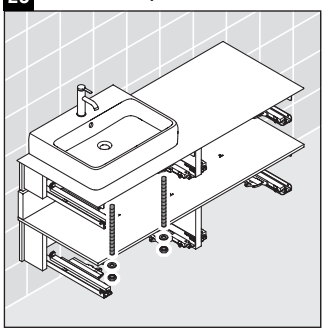

26

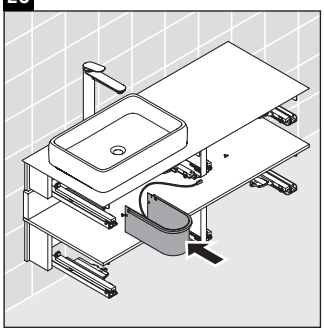

27

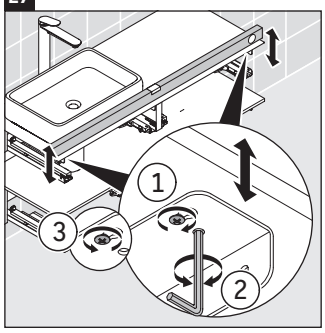

28

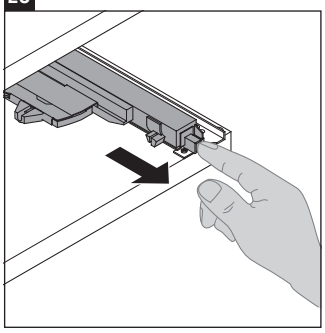

29

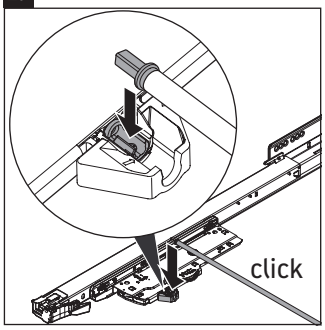

30

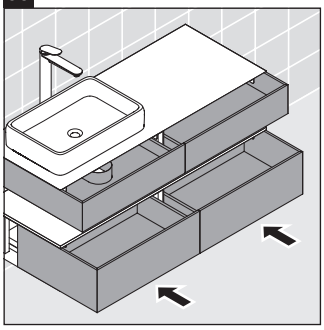

31

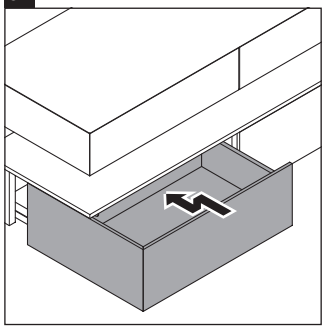

32

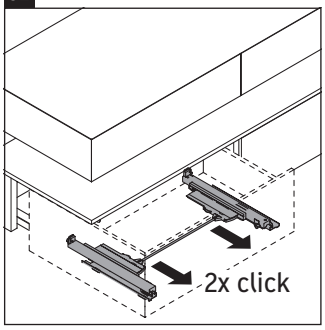

33

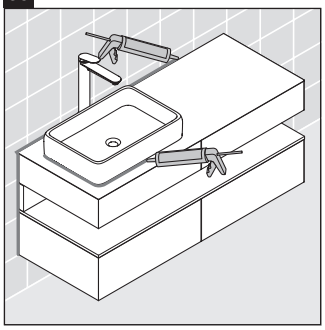

34

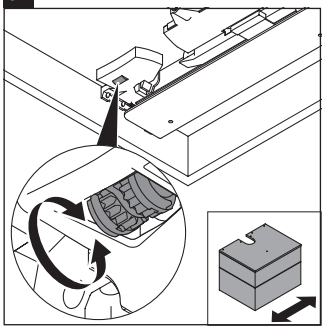

35

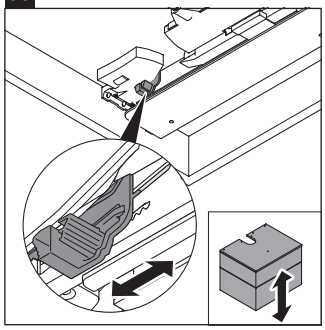

36

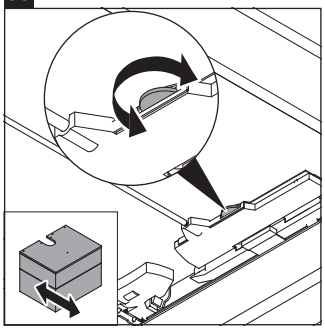

37

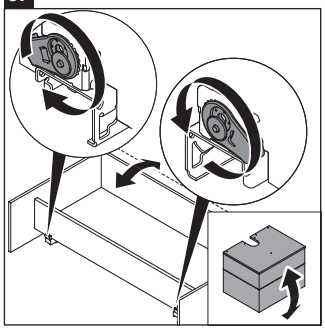

Order no. QA4777/23.01.1

Duravit AG, Werderstr. 36, 78132 Hornberg, Germany, Phone +49 78 33 700, Fax +49 78 33 70 289, info@duravit.de, www.duravit.de