White Tulip # WT 4892

Mounting instructions

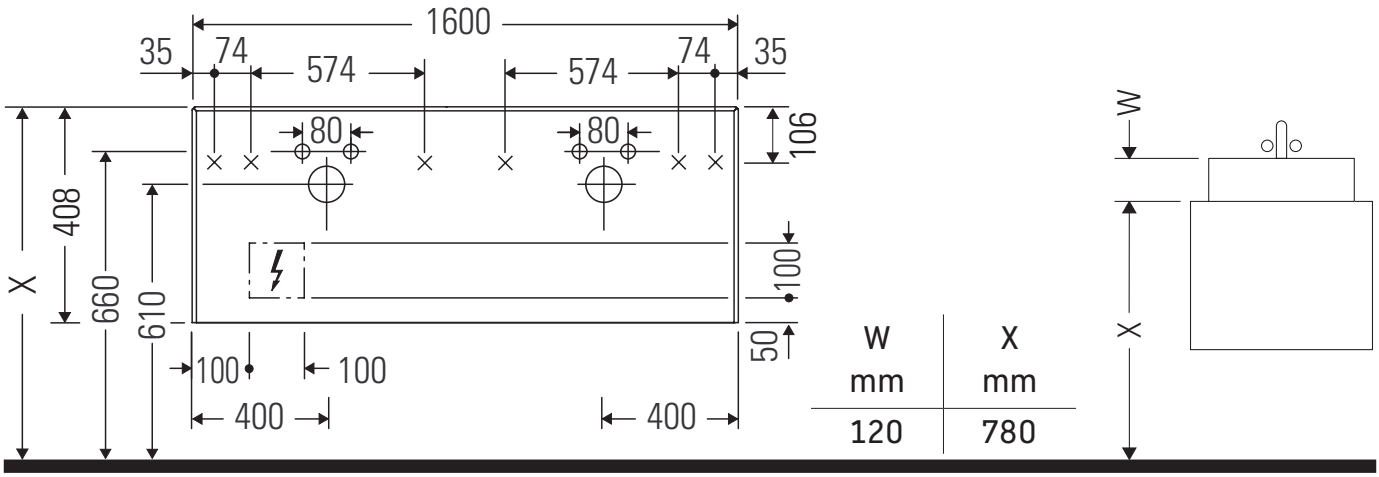

W mm	X mm
120	780

Bento Starck Box # 266013

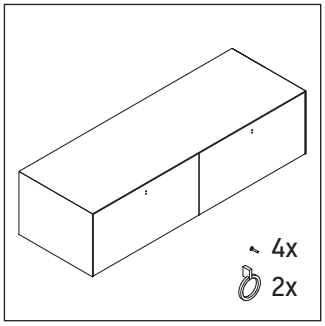

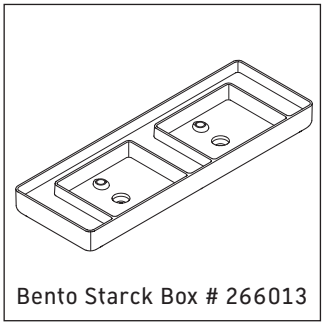

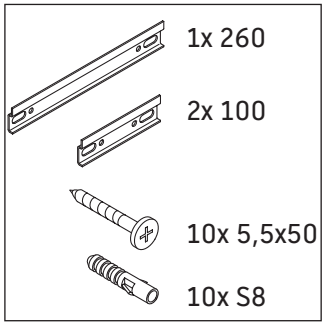

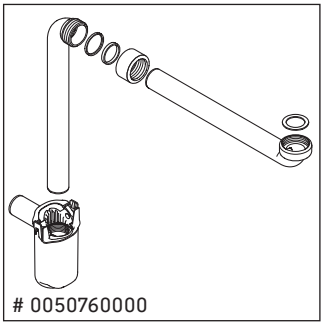

Instructions for use

The bathroom furniture range complies with the standards and guidelines applicable at the time of delivery and is designed for use in bathrooms. Direct contact with water should be avoided, for example, when showering.

We reserve the right to make technical improvements and design modifications to the products illustrated.

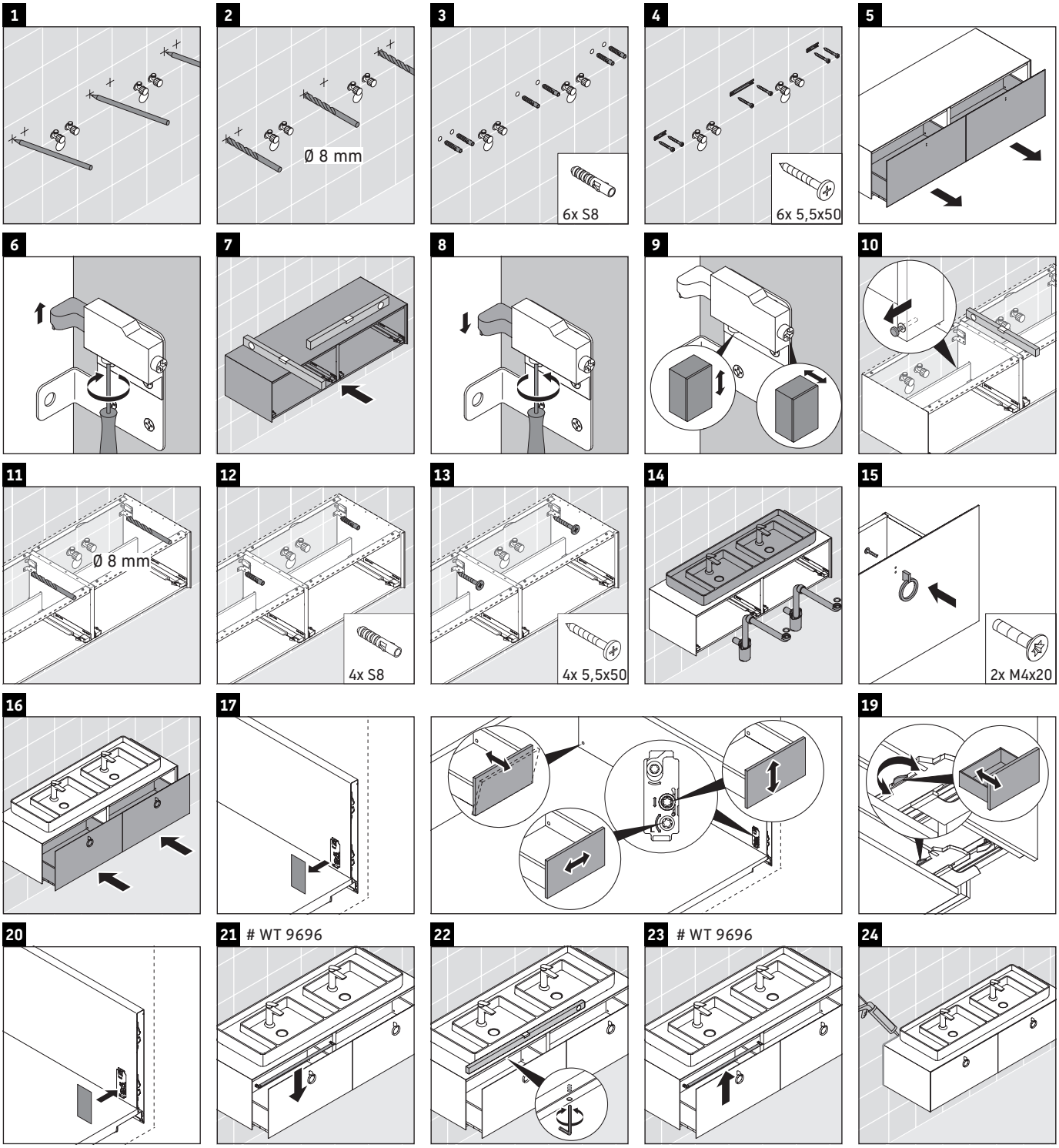

Order no. WT4892/22.10.2

Duravit AG, Werderstr. 36, 78132 Hornberg, Germany, Phone +49 78 33 700, Fax +49 78 33 70 289, info@duravit.de, www.duravit.de